PCB Piezotronics Inc. claims proprietary rights in the information disclosed hereon. Neither it nor any reproduction thereof will be disclosed to others without the written consent of PCB Piezotronics Inc.

70636

REVISIONS		
REV	DESCRIPTION	DIN
NR	RELEASED TO DRAFTING	48868

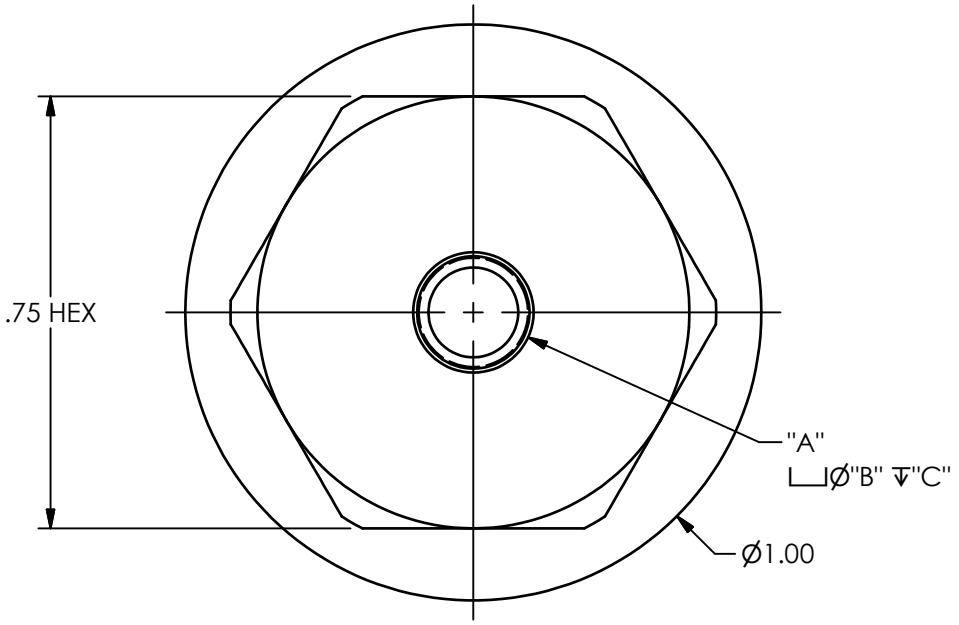

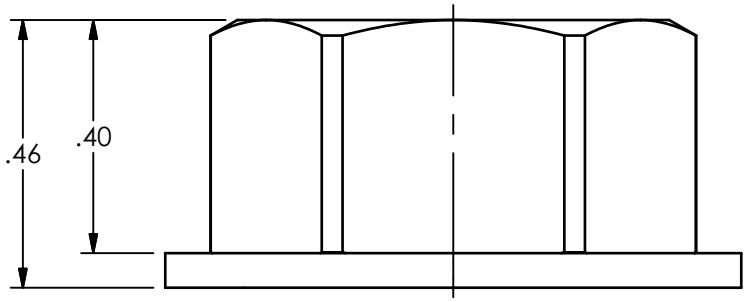

2.) CONTINUOUS OPERATING TEMPERATURE:
-100°F TO 482°F [-73°C TO 250°C]

1.) PULL STRENGTH = 12 LBS

MODEL NUMBER	"A"	"B"	"C"
M080A179A	M3 X 0.5 - 6H	N/A	N/A
M080A179	M5 X 0.8 - 6H	.209	.019
080A179	10-32 UNF - 2B	.209	.019

UNLESS OTHERWISE SPECIFIED TOLERANCES ARE:	
DIMENSIONS IN INCHES	DIMENSIONS IN MILLIMETERS [IN BRACKETS]
DECIMALS XX ±.03 XXX ±.010	DECIMALS X ± 0.8 XX ± 0.25
ANGLES ± 2 DEGREES	ANGLES ± 2 DEGREES
FILLETS AND RADII .003 - .005	FILLETS AND RADII 0.07 - 0.13

DRAWN		CHECKED		ENGINEER	
KRM	12/10/18	KRM	12/10/18	KDW	12/10/18

TITLE

OUTLINE DRAWING
080A179 SERIES

PCB PIEZOTRONICS™
3425 WALDEN AVE. DEPEW, NY 14043
(716) 684-0001 E-MAIL: sales@pcb.com

CODE IDENT. NO. 52681

DWG. NO. 70636

SCALE: 3X

SHEET 1 OF 1